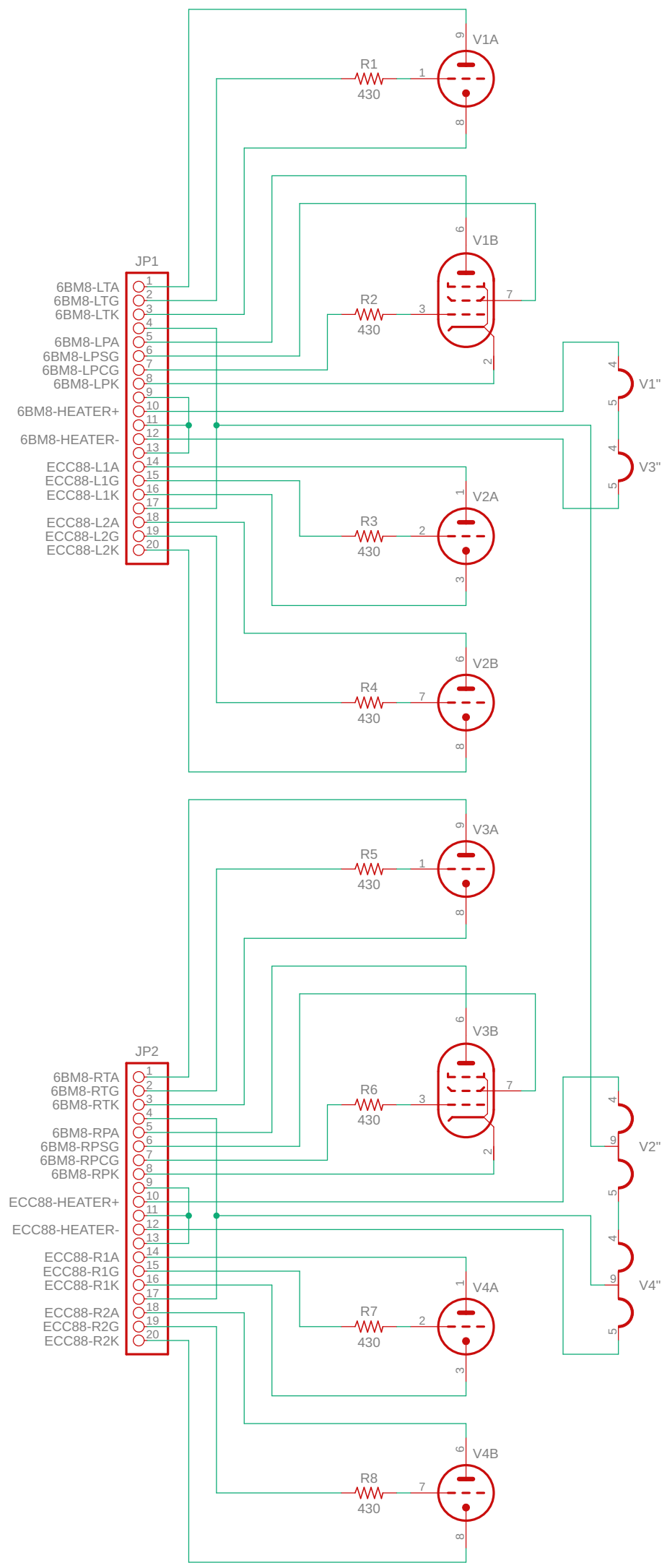

Vacuume Tube OTL Earphone Amplifier
/ Tube Unit
Copyright (C) 2021-2022 HORIGUCHI Junshi

https://iridium.jp
https://github.com/toolbits
zap00365@nifty.com

CC BY-NC-SA 4.0

TubeUnit

2022/10/09 18:03

Sheet: 1/1

Rev.1